The exergy investigation of a R410a mechanical vapor compression chiller for residential cooling

Uthpala Perera[1,2], Nobuo Takata[1], Takahiko Miyazaki[1,3], Yukihiro Higashi[3] and Kyaw Thu[1,3]

[1]*Interdisciplinary Graduate School of Engineering, Kyushu University*

[2]*Green Asia Education Center, Kyushu University*

Kasuga-koen, Kasuga, Fukuoka 816-8580, Japan,

[3]*Reasearch Center for Next Generation Refrigerant Properties (NEXT-RP)*

I2CNER-WPI, Kyushu University, Japan

Abstract

The high global warming potential refrigerant R410a is being phased out under the Kigali Amendment. However, it is still a common refrigerant in residential units for most developing nations. Thus to provide an insight into the potential areas of improvement for the cooling system and for future comparisons with environmentally friendly refrigerants, the first and second laws of thermodynamics is used to analyze a 2.0 kW chiller. The optimum charge is determined to be 0.84 kg. Exergy analysis highlights the high irreversibilities in the compressor. The exergetic efficiency illustrates the effects of evaporator temperature and reiterates the deduction of the optimum charge amount and areas for improvement.

1. Introduction

The need for cooling has been increasing[1] since the introduction of the commercial air conditioner in the early 1900s[2]. A report by the International Energy Agency (*IEA*) shows that the increase in demand for cooling will result in a threefold increase in global energy use for cooling compared to the 2016 level[3]. The main drivers of this increase are the increased global temperatures resulting from global warming and climate change[4] which have led to frequent unbearable heat waves through many countries, the increase in living standards of people especially in developing nations and the creation of urban heat island effects due to the rise in urbanization. Unsurprisingly, the largest contributors to the increased growth of the cooling industry is seen in Asia, with China, India and Indonesia collectively resulting in half of the projected cooling energy use in 2050[3]. When the cooling demand is broken down into the commercial and residential sectors, it is clear that the largest contribution is caused by the latter, in both the number of units and the overall energy consumption[3]. A further look at the breakdown of the particular types of cooling systems used reveals that mini-split types and multi-split type air conditioners occupy around 77% of the market[3]. These split type units have often been using R410a as the main refrigerant since moving away from R22[5] which possessed high ozone depletion potential (*ODP*). The use of R410a is currently being controlled by the Kigali Amendment and many fluorine gas regulations[14][15] across the globe due to its high global warming potential (*GWP*). In many countries including the European Union[6][7], Japan[8][9] and several other nations[10] which fall under the Group 5[11] of the Montreal Protocol[12], still rely on R410a even with the phase out of this refrigerant eminent under the Kigali Amendment[13]. Since many countries are either still in the transition phase or still have several years till the strict control of R410a occurs, there is a necessity to explore alternatives to this high GWP refrigerant. Several key studies related to the use of R410a have already been published by Fukuda et al.[16][17] and Thu et al.[18] regarding the heating applications which are of importance to countries at higher latitudes. Chen W.[19] has used simulations to compare the performance and environmental impact of converting

residential air conditioners larger than 3.0 kW to R410a from R22. Fukuda et al.[20] has also looked at the cooling applications of R410a with respect to the cycle performance, by using the internal measurements of the refrigerant side properties. This method is often more applicable to scientific studies rather than practical and industrial evaluations. The authors have also have studied the cooling conditions as per the air conditioning, heating and refrigeration institute (*AHRI*) standards and also explored the exergy analysis of the system which was limited to 1.6 kW of cooling[21]. The use of exergy analysis has been proven to be important in finding the key areas of improvement for a chiller or other systems. Exergy investigations can offer insight into the component level losses and room for improvement as pointed out by the authors' previous work[21] and have since then also be used to show the limits of improvement which can be achieved for components under studies by Morusuk et al.[22] and also been applied to simulations in research by Bilgen et al.[23].

However, for the case of small capacity split units which often caters to a single room, the system analysis for R410a under regular operating conditions has not been carried out. Thus a 2 kW chiller is operated at varied cooling capacities and variable charge amounts to determine its performance characteristics and also evaluate its exergetic performance. The external circuit or water side properties and power consumption are used in order to easily measure the performance of the system as a whole, whilst more in-depth analysis has employed internal measurements to provide a more holistic evaluation. Utilizing the first law of thermodynamics the basic performance is analyzed and then the second law of thermodynamics is employed for a look into the exergy destruction at the component level as well as the system exergetic efficiency which are presented herein.

2. Experimental Methodology

2.1. Experimental Appartus

The experimental apparatus used for the experiments is a 2 kW rated chiller with variable speed compressor and chilled water and cooling water systems (see Fig. 1). This apparatus has been previously described in literature[18][21]. The inverter power to the compressor can be recorded, whilst the temperatures and pressures at the inlets and outlets of the heat exchangers both in the water side and refrigerant side, as well as the suction and discharge points of the compressor and inlet and outlet of the expansion device together with the mass flow rates are recorded. The required conditions for the cooling mode are shown in Table 1. Under these conditions the cooling capacity can be varied between 1.4 kW and 2.4 kW, whilst the R410a charge amount is varied between 0.74 kg and 0.90 kg.

2.2. Equations

The analysis of the mechanical vapor compression (MVC) cycle is carried out based on the first and second laws of thermodynamics. The refrigerant properties when required are determined using Refprop 10.0[24] and the analysis of data has been carried out using Mathematica[25] software. Utilizing the first law, the energy balance is first calculated to ascertain the validity of the results to follow. This is carried out in a similar method as presented in previous works[21][26]. Secondly the basic indicator of performance for a chiller, the coefficient of performance (COP) of the system is determined based on Eq. 1, where the cooling effect of the chiller is measured using the chilled water side properties, whilst the power input into the system is directly read off the power meter of the compressor. The employment of external measurements provides an easy way to compare this performance with other chillers and even other refrigerants, which is essential in the case of R410a which should be phased out of use in the near future as per international treaties and local laws in many countries.

$$COP = \frac{\dot{m}_{CH} \times c_p \times (T_{CH,In} - T_{CH,Out})}{P_{Comp}} \quad (1)$$

Moving on to the second law analysis, the exergy destruction is calculated based on the dead state temperature and pressure of T_0 = 298.15 K and P_0 = 101.325 kPa. The general form of the exergy destruction equation applied is shown in Eq. 2-3, whilst more detailed expressions for each component of the cycle can be referred to in previously published work[21][26].

$$\dot{E}_D = \sum_{j=1}^{n}\left(1-\frac{T_o}{T_j}\right)\dot{Q}_j + \left(\dot{W}_{cv} + p_o\frac{dV_{cv}}{dt}\right) + \sum_i \dot{m}_i e_{f\,i} - \sum_e \dot{m}_e e_{f\,e}, \quad (2)$$

$$e_f = (h_i - h_0) - T_0\,(s_i - s_0). \quad (3)$$

The exergy efficiency (η_{Ex}) is shown as follows in Eq. 4,

$$\eta_{Ex} = COP\left(\frac{T_0}{T_{Evap}} - 1\right). \quad (4)$$

3. Results and Analysis

3.1. Optimum Charge

The optimum charge for this system needs to be determined by evaluating its COP at different charge amounts. Since the system is designed for 2.0 kW, the respective COPs from 0.74 kg to 0.90 kg are shown in Fig. 2. The dome like behavior indicates that the charge of 0.84 kg of R410a provides the optimum behavior or highest COP for the current system. Thus 0.84 kg is determined to be the optimum charge amount. In the case of overcharging the system, the COP drops rapidly, whilst when undercharged the drop is not significant till it differs by more than 0.1 kg. This suggests that care must be taken not to increase the overall charge of a system in the hopes of expecting improved performance and that as long as the refrigerant levels does not drop largely from the optimum, an adequate performance can be obtained.

3.2. Exergy Destruction at 2.0 kW

As seen in Fig. 3, the exergy destruction rate is lowest for the newly determined optimum charge of 0.84 kg. This reinforces the previous result. To further explore the reasons for the reducing exergy destruction when the optimum charge is reached and the increase when it is overcharged or undercharged, the component level exergy destruction will be investigated in the next section.

3.3. Component Exergy Destruction at 2.0 kW

To compare the exergy destruction behavior for the design load of 2.0 kW, the lowest, optimum and largest charge amounts of R410a are analyzed and presented in Fig. 4. It is possible to see that the exergy destruction within the condenser increases as the charge amount is increased. This could be caused by the reduced contact surface area within the heat exchangers since more liquid would accumulate at the end and the resistance to flow caused by this, which is indicated by the increased subcool temperatures in Fig. 2 as well. The expansion valve shows the opposite trend with reduced exergy destruction rates. This could be a result of the reduced mass flow rates in order to maintain the constant cooling load. The evaporator shows the smallest exergy destruction during the optimum charge conditions. This is possibly due to the fact that the evaporator is working at its designed conditions and is exchanging maximum amount of heat per refrigerant kg. As for the compressor the high exergy destruction at both under and overcharge conditions could be a result of inadequate refrigerant and reduced compressor performance at very low frequencies, respectively. It is noted that the compressor is the largest contributor to the exergy destruction in all cases.

3.4. Exergy Efficiency at 2.0 kW

The exergy efficiency represents the irreversibilities or exergy destruction and its effects on the overall refrigeration cycle. It is clearly seen that the evaporator and compressor have the largest effect on this

since Eq. 4 shows its dependence on *COP*. However, the slight variations in the evaporator temperature results in the shifting of the exergy efficiency towards a more positive value as is the case of 0.77 kg (see Fig. 5). However, the optimum charge amount of 0.84 kg takes the 2nd highest exergetic efficiency, signifying its high *COP* and reiterates its deduction.

4. Conclusion

The analysis of a 2.0 kW chiller, has allowed the determination of the optimum amount of charge of R410a as 0.84 kg and also allowed the exploration of the exergetic parameters. The exergy destruction exhibited that the compressor was the largest contributor to the irreversibilities within the system and that the total exergy destruction was the lowest at 0.84 kg. Over charging or under charging refrigerant will cause increased losses and contribute to the lower efficiency of each component. The condenser was the only component which showed increasing exergy destruction with increased charge amount. Finally, the exergetic efficiency showed the resultant exergy destructions and their effects on the overall performance of the chiller system, whilst any increase in evaporator temperature can cause positive exergetic efficiencies.

Acknowledgment

The authors are grateful to the funding provided by the Kyushu University Green Asia program for the doctoral funding of Uthpala Perera and to the collaborative effort on the experiments by Mr. K. Takezato and Mr. S. Senba.

Reference

[1] A. Vaughan, *Guard.* **2018**.
[2] P. Lester, *Dep. Energy* **2015**.
[3] *The Future of Cooling Opportunities for Energy- Efficient Air Conditioning*, **2018**.
[4] B.J. van Ruijven, E. De Cian, I. Sue Wing, *Nat. Commun.* **2019**, *10*, 1.
[5] J.M. Calm, P.A. Domanski, *EcoLibrium* **n.d.**, *no. 10*, 18.
[6] B. Gschrey, J. Kleinschmidt, S. Barrault, *Briefing Paper : HFCs and HFC Alternatives in Split Air Conditioning Systems*, **2020**.
[7] EEA, *Fluorinated Greenhouse Gases 2019*, **2020**.
[8] T. HIRAO, H. MIZUNO, K. UEDA, M. KAI, H. YAMADA, *Efforts to Reduce Greenhouse Gas Emissions for Air Conditioning and Refrigeration Products*, **2018**.
[9] T. Okada, *Refrigerant Conversion Activities Including Energy Efficiency in Japan*, Bangkok, Thailand **2019**.
[10] B. Maranion, M. Pizano, A. Woodcok, *Montreal protocol on substances that deplete the ozone layer: Report of the technology and economic assessment panel*, **2020**.
[11] M. Seki, *The Latest Developments under the Montreal Protocol and the Kigali Amendment*, **2017**.
[12] Ozone Secretariat, *Handbook for the Montreal Protocol on Substances That Deplete the Ozone Layer*, Nairobi, Kenya **2019**.
[13] Ozone Secretariat, *The Kigali Amendment: The Amendment to the Montreal Protocol Agreed by the Twenty-Eighth Meeting of the Parties*, **2016**.
[14] F-Gas Regulation Japan. *Minist. Environ. Japan* **2015**.
[15] EU Legislation to control F-Gases, *Eur. Comm.* **2015.**
[16] S. Fukuda, H. Kojima, C. Kondou, N. Takata, S. Koyama, *Int. Refrig. Air Cond. Conf.* **2016**.
[17] S. Fukuda, C. Kondou, N. Takata, S. Koyama, *Int. J. Refrig.* **2014**, *40*, 161.
[18] K. Thu, K. Takezato, N. Takata, T. Miyazaki, Y. Higashi, *Appl. Therm. Eng.* **2021**, *182*, 115952.
[19] W. Chen, *Appl. Therm. Eng.* **2008**, *28*, 1.
[20] S. Fukuda, H. Kojima, C. Kondou, N. Takata, S. Koyama, *Sci. Technol. Built Environ.* **2016**, *22*, 1118.
[21] C.U.A. Perera, N. Takata, T. Miyazaki, Y. Higashi, B.B. Saha, K. Thu, *Heat Transf. Eng.* **2020**, *7632*.
[22] T. Morosuk, G. Tsatsaronis, *Energy* **2009**, *34*, 2248.
[23] E. Bilgen, H. Takahashi, *Exergy, An Int. J.* **2002**, *2*, 259.
[24] E.W. Lemmon, I.H. Bell, M.L. Huber, M.O. McLinden, *Natl. Inst. Stand. Technol. Stand. Ref. Data Program, Gaithersbg.* **2018**.
[25] **2015**.
[26] C. Uthpala, A. Perera, B.B. Saha, T. Miyazaki, S. Koyama, K. Thu, *Exergy Analysis of a Vapour Compression Chiller at Elevated Chilled Water Outlet Conditions*, **2018**.

Email: perera.c.845@s.kyushu-u.ac.jp

Table 1. Experimental conditions for the 2.0 kW chiller.

Parameters	Inlet	Outlet
Evaporator chilled water temperature (°C)	20	10
Condenser cooling water temperature (°C)	30	45
Superheat (K)	4 ± 1	

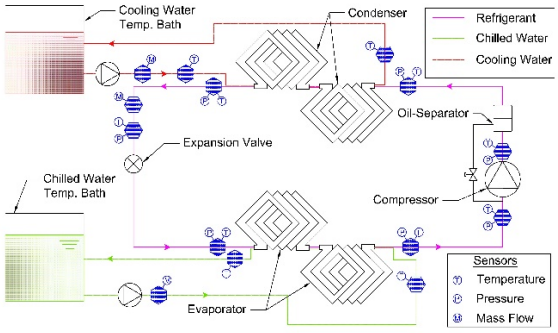

Figure 1. The schematic of the mechanical vapor compression chiller.

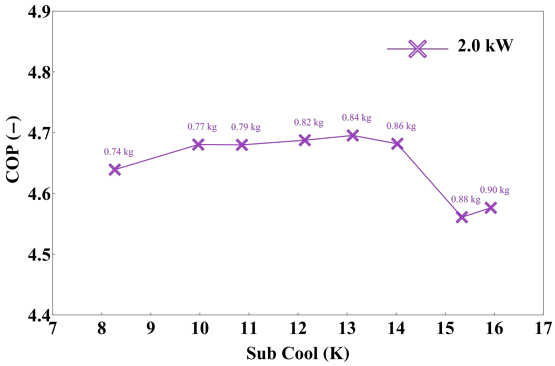

Figure 2. The COP versus subcool at 2.0 kW for varied charges (0.74 kg – 0.90 kg).

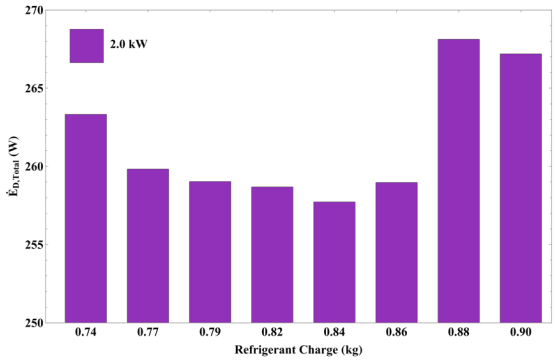

Figure 3. Total exergy destruction at 2.0 kW for varied R410a charge amounts.

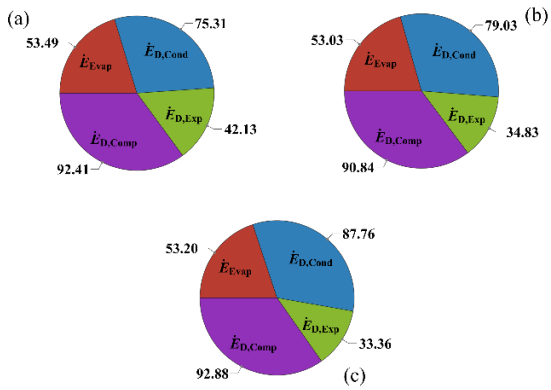

Figure 4. Component exergy destruction at 2.0 kW for (a) 0.74 kg, (b) 0.84 kg and (c) 0.90 kg.

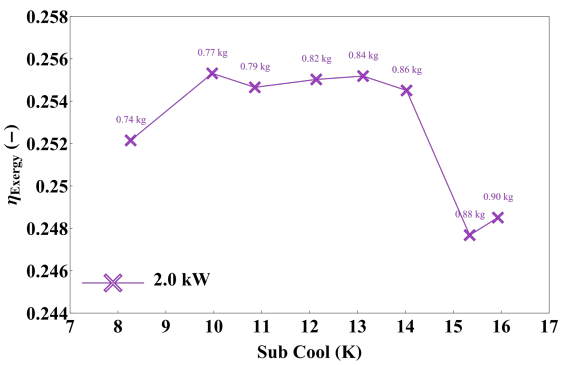

Figure 5. The exergy efficiency versus subcool at 2.0 kW for varied R410a charge amounts.